SETUP GUIDE

Puritan Bennett™ 560 ventilator

DISCLAIMER

The Puritan Bennett™ 560 ventilator system has not been FDA cleared. The Puritan Bennett™ 560 ventilator system has been authorized by FDA under an EUA. The Puritan Bennett™ 560 ventilator system is authorized only for the duration of the declaration that circumstances exist justifying the authorization of emergency use of this ventilator system under section 564(b)(1) of the Act, 21 U.S.C. § 360bbb-3(b)(1), unless the authorization is terminated or revoked sooner.

Medtronic
Further, Together

POWERING ON THE VENTILATOR

To turn the ventilator on, set the **I/O** switch — a covered, rocker-type switch located at the rear of the ventilator (shown in the figure below) — to the **I** position.

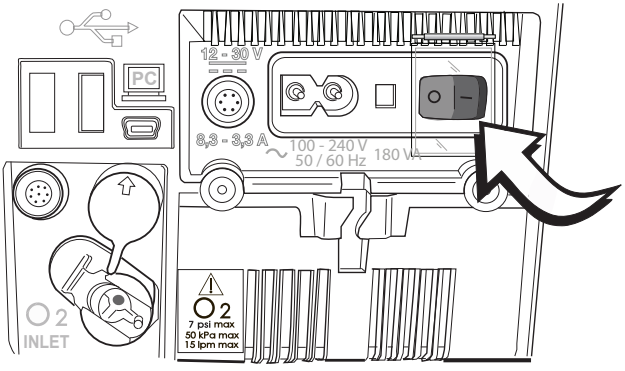

The following events occur:

- The front panel indicators flash (except for the indicator showing the type of power supply in use, which remains lit).
- The audible alarms briefly sound.
- The display's backlight turns on.
- The Puritan Bennett™ brand name is displayed momentarily.
- The blue **VENT STANDBY** indicator to the right of the **VENTILATION ON/OFF** ⏻ key illuminates — indicating the device is in standby mode.

INITIATING VENTILATION

Press **VENTILATION ON/OFF** ⏻ key on the front panel.

- The blue light indicator at the upper right of the **VENTILATION ON/OFF** ⏻ key turns off.
- The device beeps.
- The ventilation starts.
- The values of the monitored parameters are displayed in the right-hand window.

STOPPING VENTILATION

1. Hold the **VENTILATION ON/OFF** key for three seconds.
2. The device beeps twice.
3. Release the **VENTILATION ON/OFF** key.
4. Press the **VENTILATION ON/OFF** key within 5 seconds to confirm stop, otherwise ventilation will continue.
5. Upon release, ventilation stops, and the blue LED illuminates — indicating that the ventilator is in standby mode.

POWERING OFF THE VENTILATOR

- Set the **I/O** switch to the **O** position to power off the ventilator
- The blue **LED** (to the right of the **VENTILATION ON/OFF** key) turns off.
- The ventilator screen switches off.

SYMBOLS AND DEFINITIONS

	Software lock enabled
ABS/ REL	Peak inspiratory pressure monitoring convention: ▪ ABS setting indicates the inspiratory pressure setting will determine the peak inspiratory pressure regardless of the PEEP setting. ▪ REL setting indicates the PEEP is added to the inspiratory pressure setting to determine the peak inspiratory pressure.
	Internal battery indicator: indicates remaining internal battery life in hours and minutes.
	Exhalation valve detected
	No exhalation valve detected
	Apnea alarm has been deactivated
	Audio paused symbol: The sounding of audible alarms is currently disabled.
	Alarm paused symbol: One or more alarms have been paused, reset, or cancelled.

ALARMS

The alarm conditions are indicated by priority level.

VERY HIGH PRIORITY (VHP)	HIGH PRIORITY (HP)	MEDIUM PRIORITY (MP)
Immediate critical situation: ventilation not possible	Critical situation in the short term	Critical situation in the long term
Continuous red LED illumination	Flashing red LED illumination	Flashing yellow LED illumination
Continuous sound signaling	Intermittent high speed sound signaling	Intermittent medium speed sound signaling

To silence the audible portion of activated alarms for 60 seconds: Press the **ALARM CONTROL** key once. The **AUDIO PAUSED** symbol displays on the screen.

To manually pause the alarm, press the **ALARM CONTROL** key twice. The **ALARM PAUSED** symbol displays on the screen. The audible portion, light indicator, and message are all halted.

WHAT TO DO IF A VENTILATOR FAILURE OCCURS

If a problem with the ventilator is suspected, **first check that the patient is not in danger.** If necessary, remove the patient from the ventilator and provide an alternate means of ventilation. Keep in mind that troubleshooting information is available in the manual to assist you in the event of a problem. Refer to the chapter "Alarms and Troubleshooting." If you cannot determine the cause of a problem, contact your equipment supplier or Medtronic.

POWER SUPPLY OPTIONS

The "mains" AC electrical supply (115/230 V nominal) should be used as the primary source of power whenever available.

The ventilator is equipped with a 12–30 VDC power connector, for usage with an external battery or car adaptor cable. The ventilator should only be operated on the internal battery when no other power source is available.

INTERNAL BATTERY CAPACITY

With a fully charged battery at a normal room temperature of 25° C (± 5° C), the ventilator can be expected to operate on internal battery power for four to five hours.*

* On fully charged battery at a setting of PIP = 10 cmH_2O, V_T = 200 ml and rate = 20 bpm. Level adjustments, environmental conditions, and physiological characteristics of the patient affect battery operating time.

FRONT

1. LCD display
2. Control panel
3. Patient connection port
4. Patient pressure Monitoring port
5. Exhalation valve port
6. Lateral and front openings

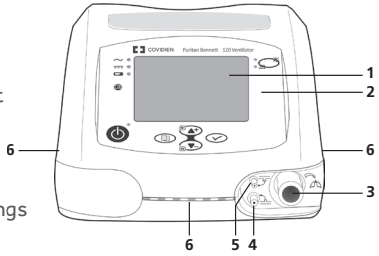

BACK

1. Ergonomic carrying handle
2. On/Off (I/O) switch with protective cover
3. AC power (“mains”) cable connector
4. AC power (“mains”) cable holding system
5. Access cover for the internal battery
6. DC power cable connector with key
7. PC cable connector
8. O_2 inlet port
9. Nurse call output connector
10. USB memory device connection
11. Air inlet filter

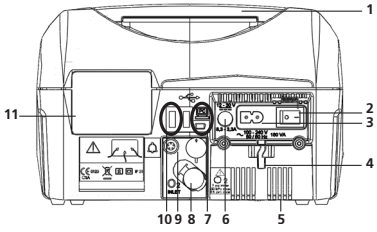

KEYBOARD

1. Alarm indicators
2. ALARM CONTROL key
3. Display screen
4. UP key
5. ENTER key
6. DOWN key
7. MENU key
8. VENTILATION ON/OFF key
9. Ventilation status indicator
10. Electrical power source indicators

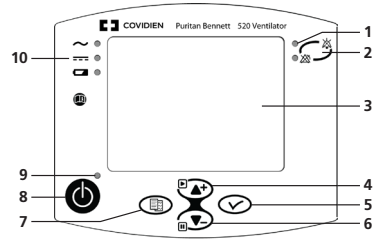

TO CONNECT A SINGLE-LIMB CIRCUIT WITH AN EXHALATION VALVE

1. Inspect the components of the patient circuit for any signs of damage, such as cracks (which might cause leakage). Do not use damaged components to assemble the patient circuit.
2. Install the bacteria filter (item 3) on the **TO PATIENT** outlet port as shown.
3. Attach one end of the short-circuit tubing (item 4) to the bacteria filter (item 3).
4. Attach the other end of the short-circuit tubing (item 4) to the inlet port of the humidifier chamber (item 10).
5. Place a water trap (item 5) between the outlet port of the humidifier and the inlet of the exhalation valve (item 7).
6. Ensure the exhalation valve (item 7) as close as possible to the patient.
7. Connect one end of the proximal pressure tubing (item 11) to the proximal pressure port on the exhalation valve (item 8) and the other end onto the ventilator patient pressure port (item 2).
8. Connect one end of the exhalation valve tubing (item 9) to the exhalation valve port on the exhalation valve (item 7) and the other end onto the ventilator exhalation valve port (item 1).
9. Connect a patient interface to the end of the patient circuit (item 6).

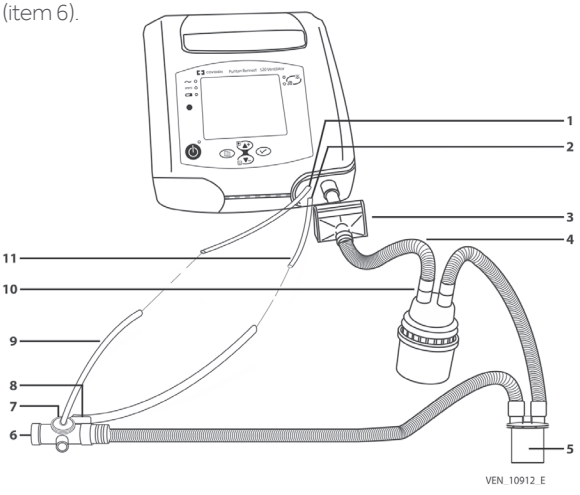

TO CONNECT A SINGLE-LIMB CIRCUIT WITHOUT AN EXHALATION VALVE (NIV ONLY)

1. Inspect the components of the patient circuit for any signs of damage, such as cracks (which might cause leakage). Do not use damaged components to assemble the patient circuit.
2. Install the bacteria filter (item 1) on the **TO PATIENT** outlet port as shown.
3. Attach one end of the short-circuit tubing (item 2) to the filter (item 1).
4. Attach the other end of the short-circuit tubing (item 2) to the inlet port of the humidifier chamber (item 6).
5. Place a water trap (item 3) between the outlet port of the humidifier and the patient end of the patient circuit.
6. Connect one end of the proximal pressure tubing (item 7) as close as possible to the patient — at the mask or cannula entry, if possible (item 5) — and the other end onto the ventilator patient pressure port (item 8).
7. Connect a vented (NIV) interface to the end of the patient circuit (item 4).

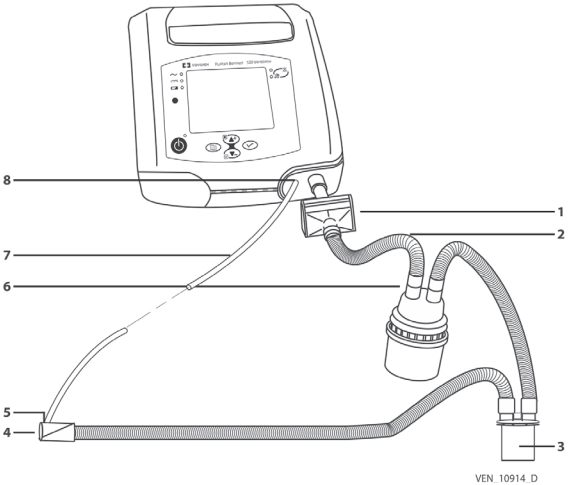

For additional ordering and technical services information, please contact your Medtronic sales representative.

© 2020 Medtronic. All rights reserved. Medtronic, Medtronic logo and Further, Together are trademarks of Medtronic. All other brands are trademarks of a Medtronic company.
04/2020-20-VE-0028-[WF#4110265]

6135 Gunbarrel Avenue
Boulder, CO 80301
800.255.6774

medtronic.com/covidien

Medtronic